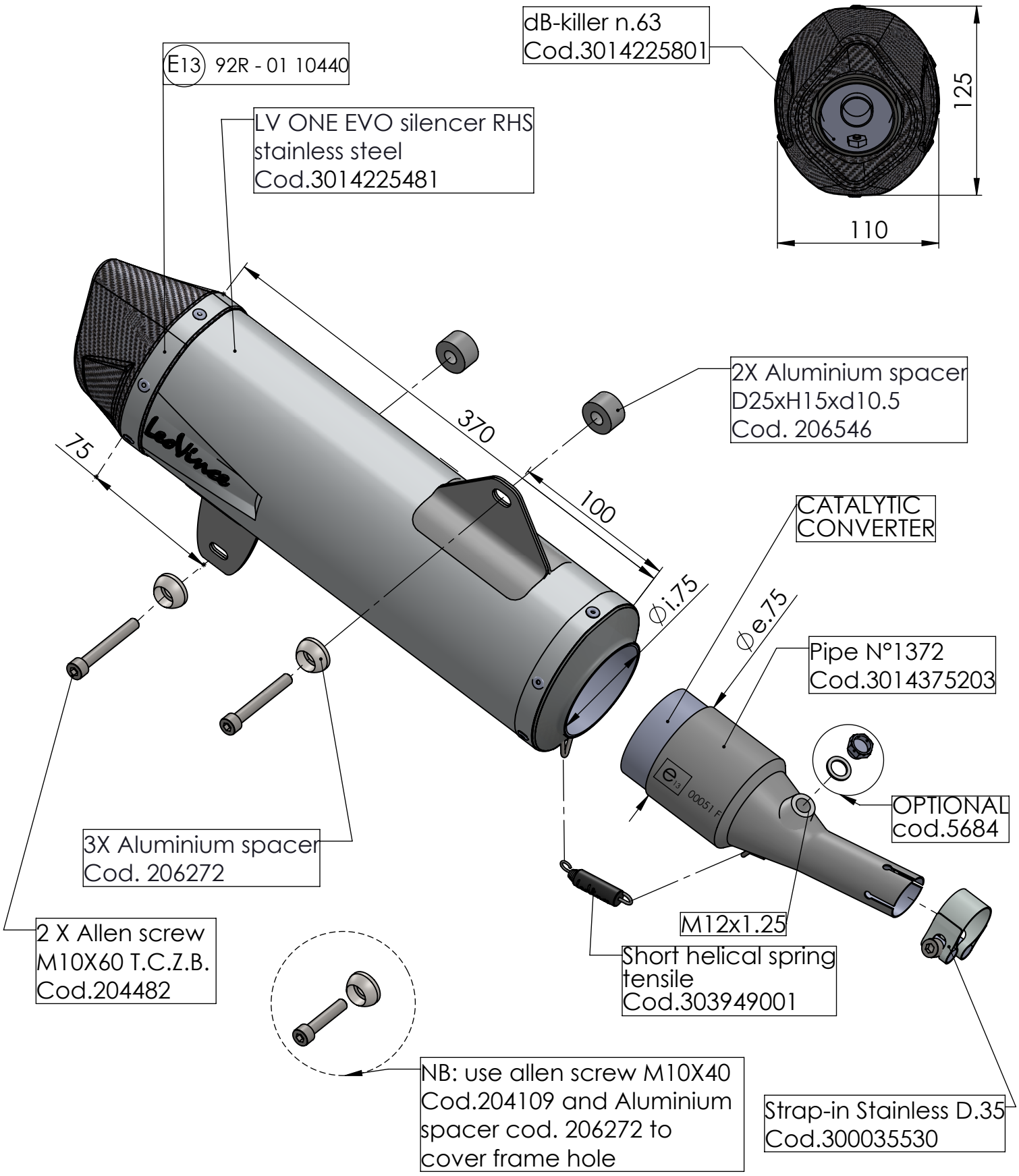

ART. 14375EK

YAMAHA X-MAX 300 / TECH MAX

SLIP-ON - LV-ONE EVO - STAINLESS STEEL - APPROVED